SH. 1 OF 1	CAT NO 248	SIZE A	DO NOT SEPARATE PRINT FROM WORK	LOT NO

OPER	TOOLS

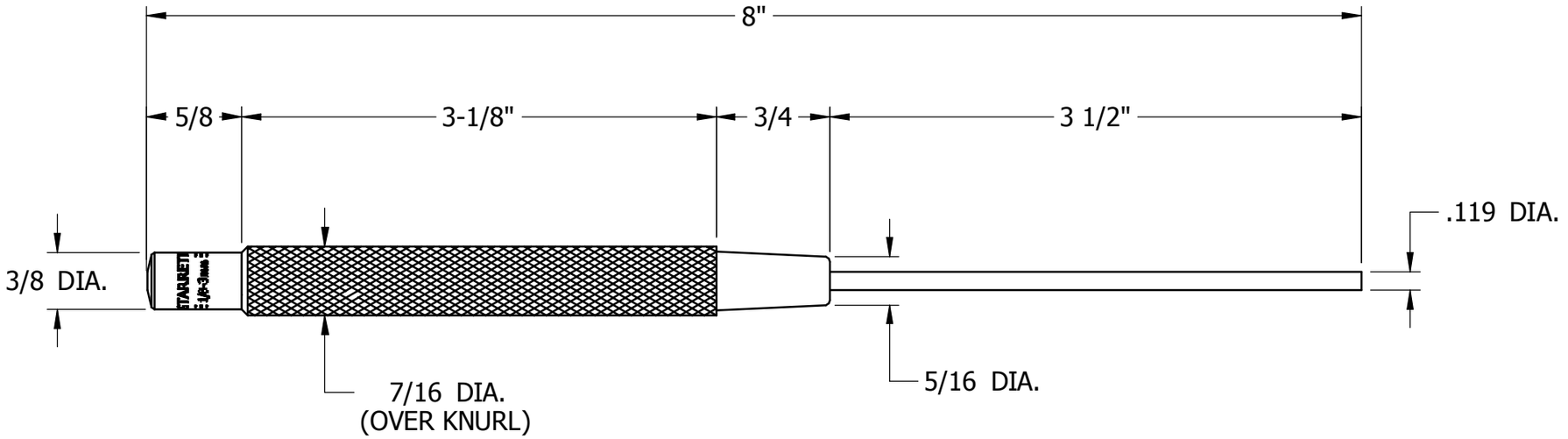

REV	DESCRIPTION	DATE	BY

DR WAT	CHK	DATE

1/8" DRIVE PIN PUNCH ASSEMBLY

FRACTIONAL TOLERANCE +- 1/64 UNLESS OTHERWISE NOTED

THE L.S. STARRETT CO.
ATHOL, MASS.