SH. 1 OF 1	CAT NO 672-2	CUSTOMER DIMENSIONS	DO NOT SEPARATE PRINT FROM WORK	LOT NO

OPER	TOOLS

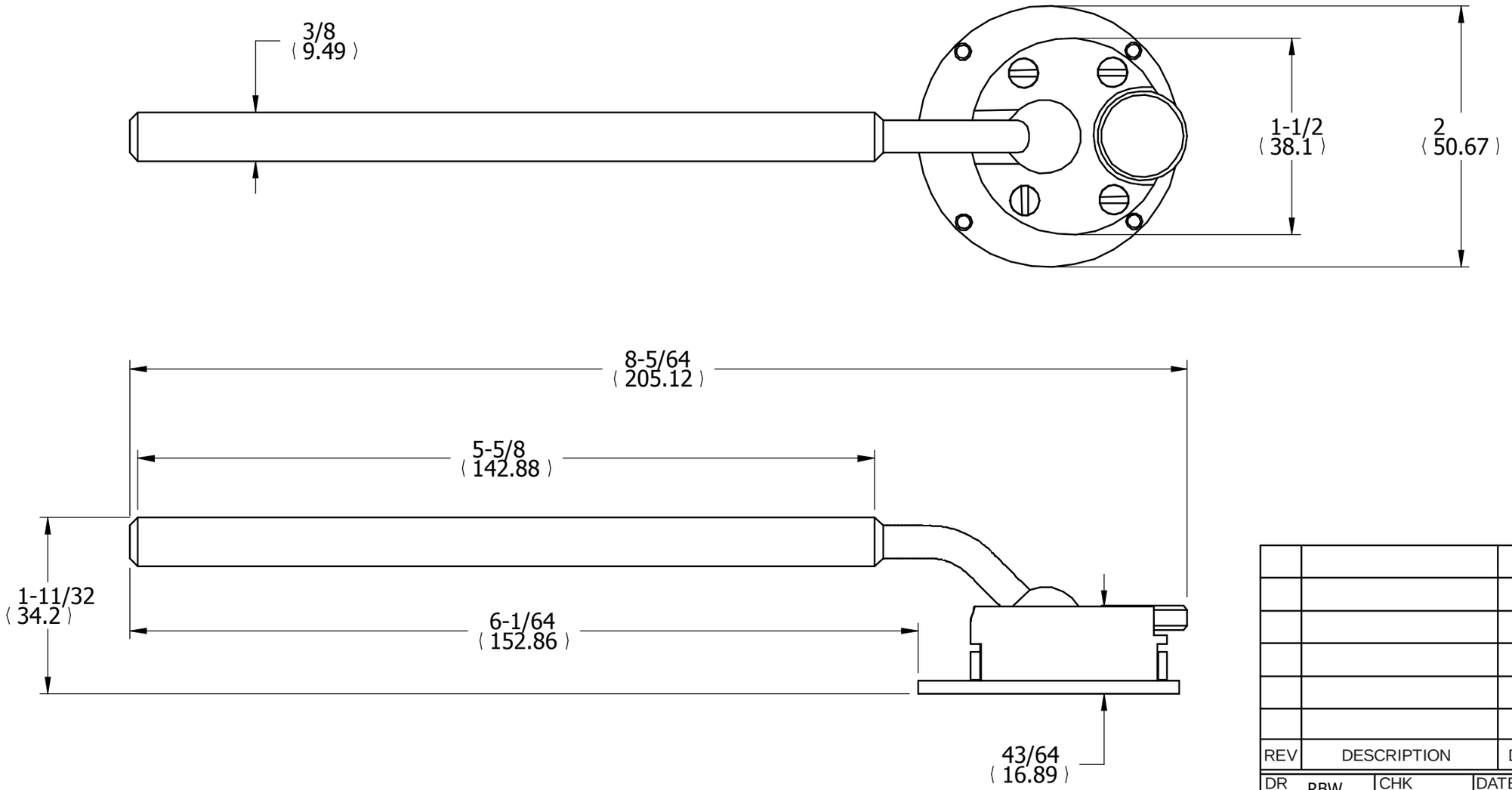

REV	DESCRIPTION	DATE	BY

DR RBW	CHK	DATE

UNIVERSAL
INDICATOR BACK

FRACTIONAL TOLERANCE +- 1/64 UNLESS OTHERWISE NOTED

THE L.S. STARRETT CO.
ATHOL, MASS.